RiYAN SEPTIANA PORTOFOLIO

1. LabVIEW

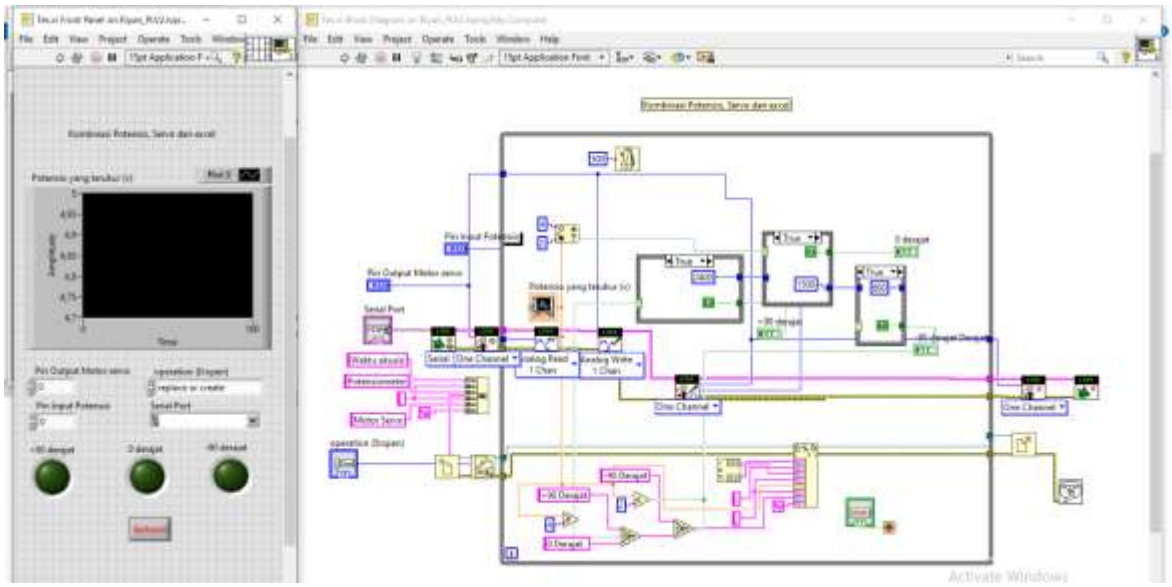

Combination LabVIEW as human machine interface to monitor servo motor with temperature sensor as an input. In LabVIEW we can define input and output pin, monitor servo angle and make some indicator logic by the program

2. Pneumatic

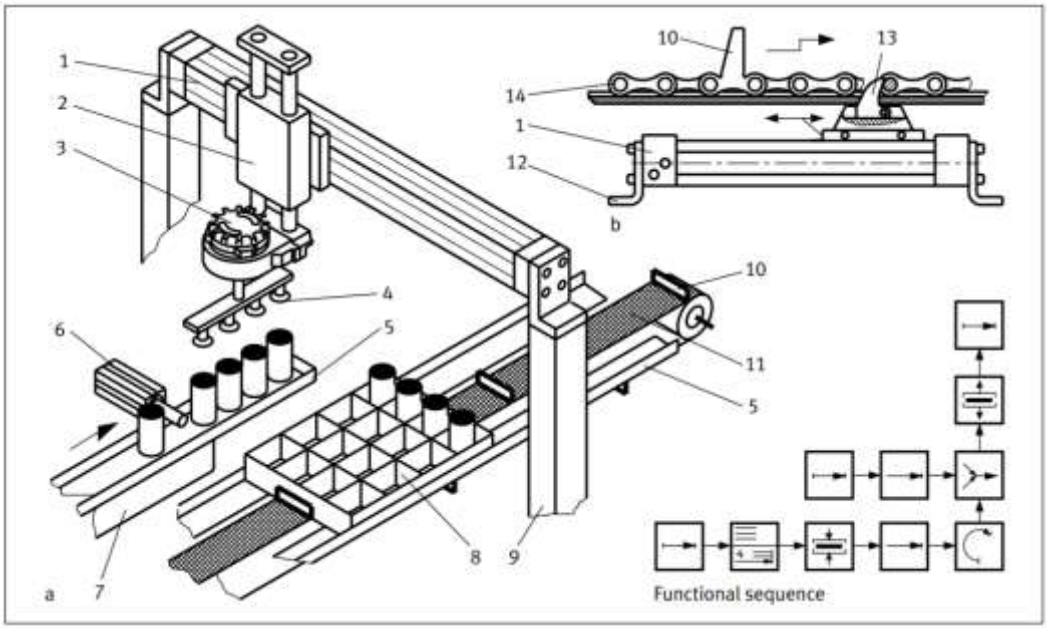

Sequential :

- Single cylinder down
- Vacuum on
- Single cylinder up
- Linear driver slides to another conveyor
- Single cylinder down
- Vacuum off
- Single cylinder up
- Linear driver slides to the first conveyor

Sequential diagram

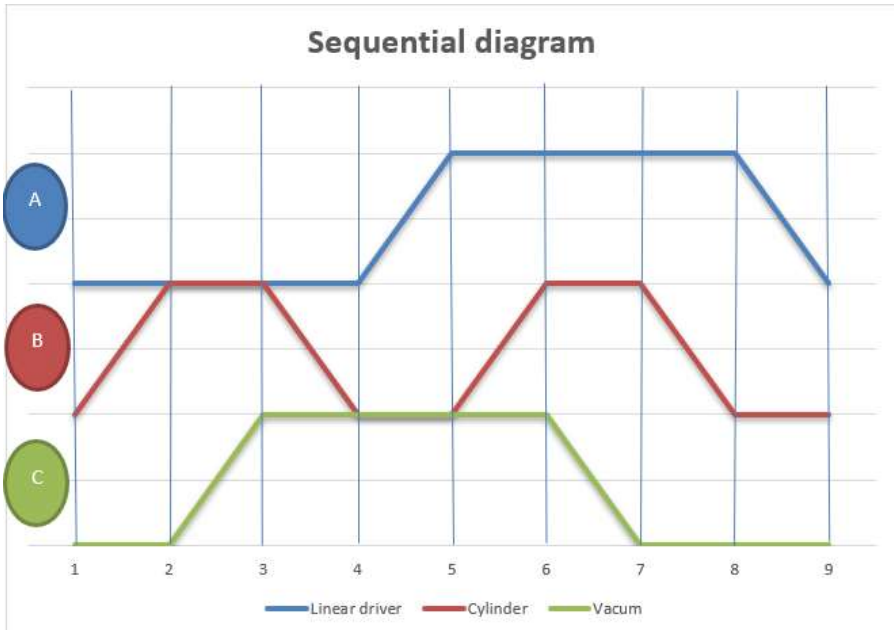

B+ = START and Sequence1

C+ = B1 and Sequence1

E2 = C1 and Sequence1

B - = Sequence2

A+ = B0 and Sequence2

E3 = A1 and Sequence2

B+ = Sequence3

C- = B1 and Sequence3

E4 = C0 and Sequence3

B- = Sequence4

A - = B0 and Sequence4

E1 = A0 and Sequence4

pneumatic circuit schematic

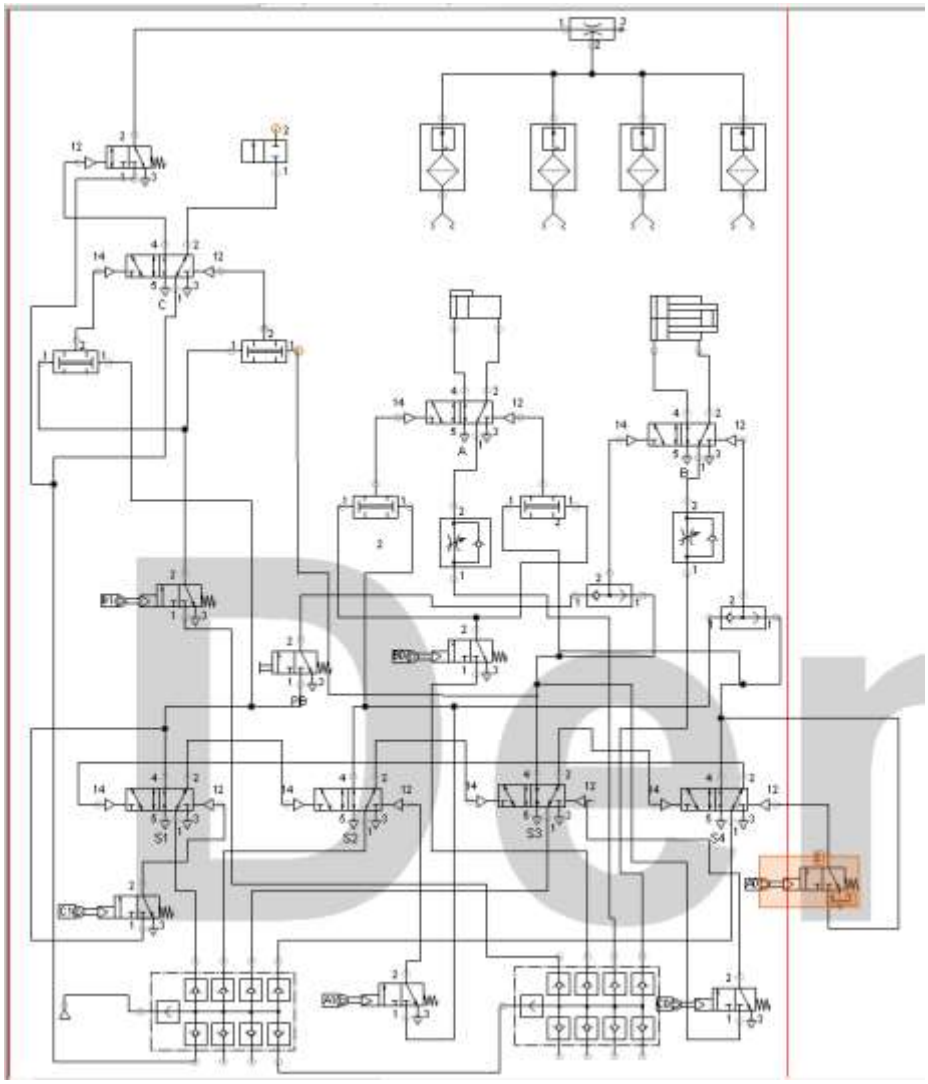

3. **3 phase electric motor control system**

This project will show how to control motor 3 phase using electrical diagram that separating into 2 wiring, there are control diagram and power diagram. There are several control motor like clockwise and counter clockwise; Star Delta, 2 Speed, braking system.

- **clockwise and counter clockwise**

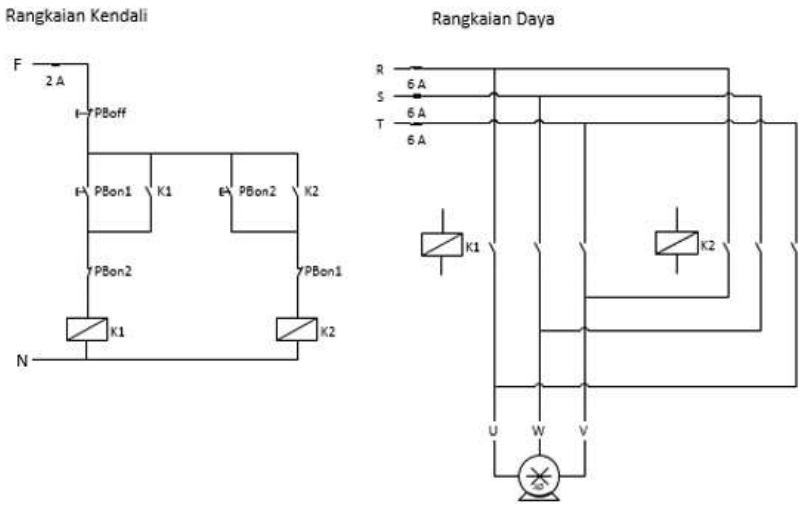

Analysis:

- On Control circuit when **Push Button 1 pressed,** it will make **Contactor 1 connect self-holding** and **contactor 2 disconnected,** on the other hand, when **Push Button 2 pressed,** it will make **Contactor 2 connect self-holding** and **contactor 1 disconnected,**
- On **power circuit,** when **Contactor 1 active, R** phase connect to **U; S** phase connect to **W**; **T** phase connect to **V;** while **X,Y,Z** will connect each other. It will makes motor running clockwise.
- On **power circuit,** when **Contactor 2 active, R** phase connect to **V; S** phase connect to **W**; **T** phase connect to **U;** while **X,Y,Z** will connect each other. It will makes motor running counter clockwise. The simply we can trade 2 wire to make running motor counter clockwise.

- **Star Delta**

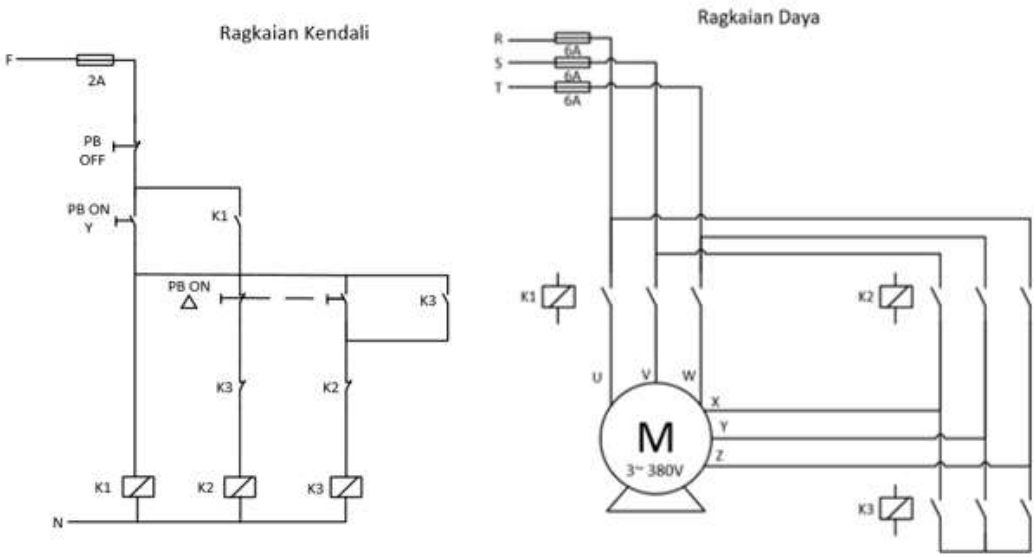

Analysis:

- On Control circuit when **Push Button Y pressed** to active contactor 1 and 2 its mean on **R** phase connect to **U** and **Z; S** phase connect to **V** and **X**; **T** phase connect to **W** and **Y.** this connection makes a START CIRCUIT. Start circuit is used to preventing significantly increased current spikes in a short period of time when a 380V motor is switched on.
- Next, when **Push Button Delta pressed,** on the control circuit, it will disconnect contactor 2 and at the same time it will connect contactor 1 and 3. Its mean that **R** phase connect to **U; S** phase connect to **V**; **T** phase connect to **W;** while **X,Y,Z** will connect each other.

- **2 Speed / YY**

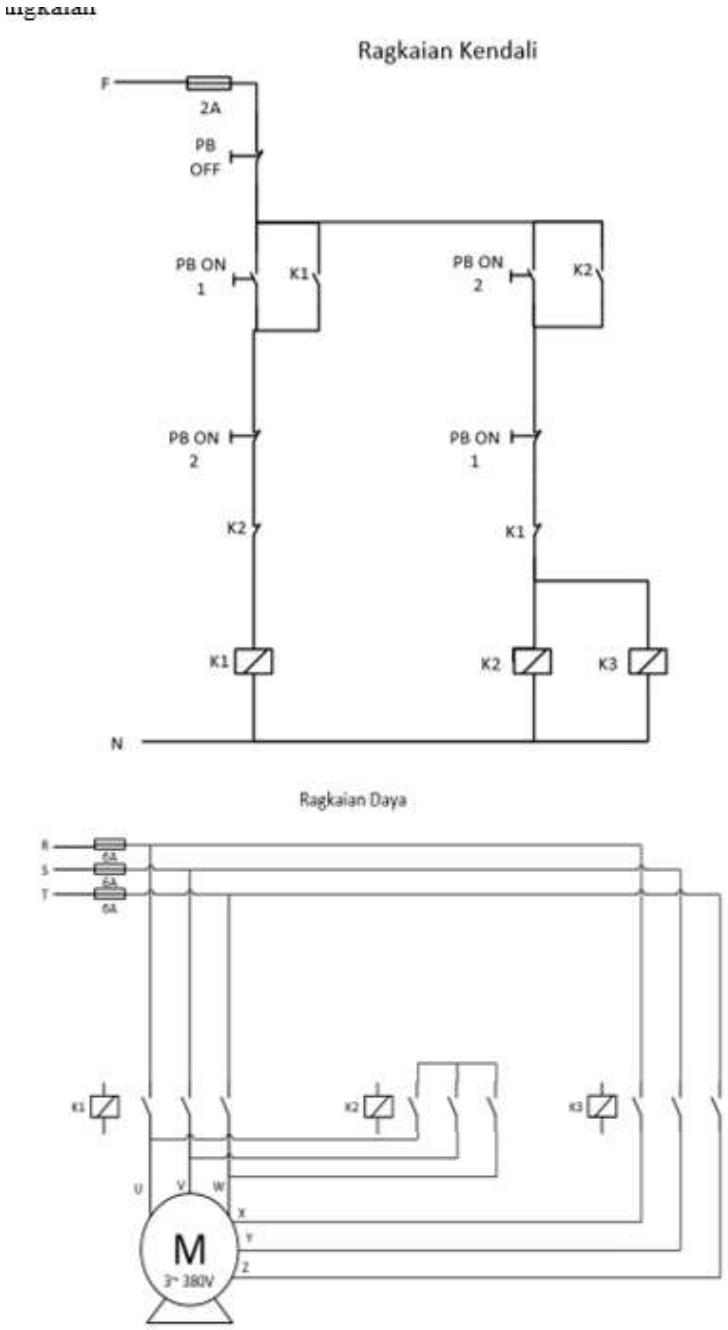

Analysis:

- On Control circuit when **Push Button 1 pressed** to active contactor 1; disconnected contactor 2 and 3. Its mean that **R** phase connect to **U; S** phase connect to **V**; **T** phase connect to **W;** while **X,Y,Z** will connect each other. Its same like **delta circuit**
- Next, when **Push Button 2 pressed,** on the control circuit, it will disconnect contactor 1 and at the same time it will connect contactor 2 and 3. Its mean that **R** phase connect to **X; S** phase connect to **Y**; **T** phase connect to **Z;** while **U,V,W** will connect each other. This circuit will make speed motor faster than before.

- **Braking**

we can choose on of them to do a braking system

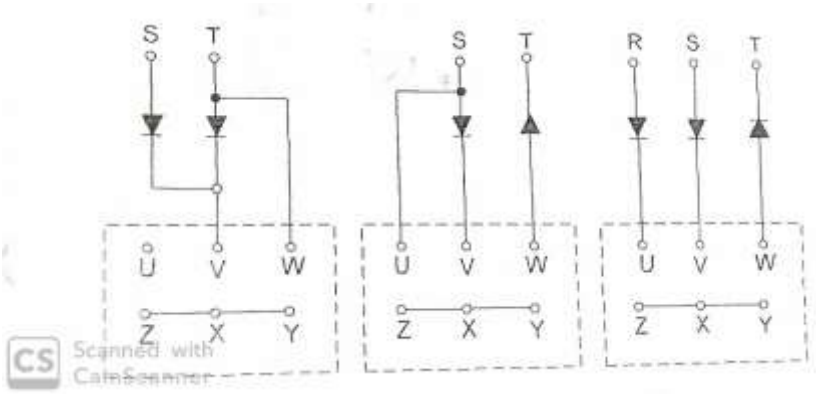

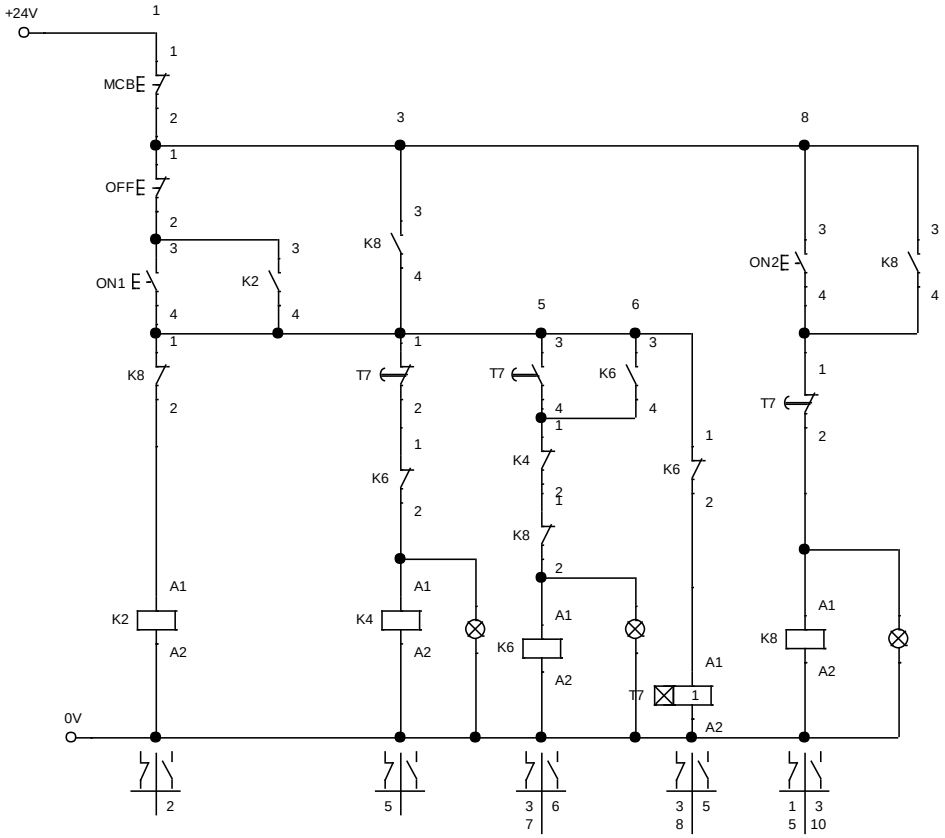

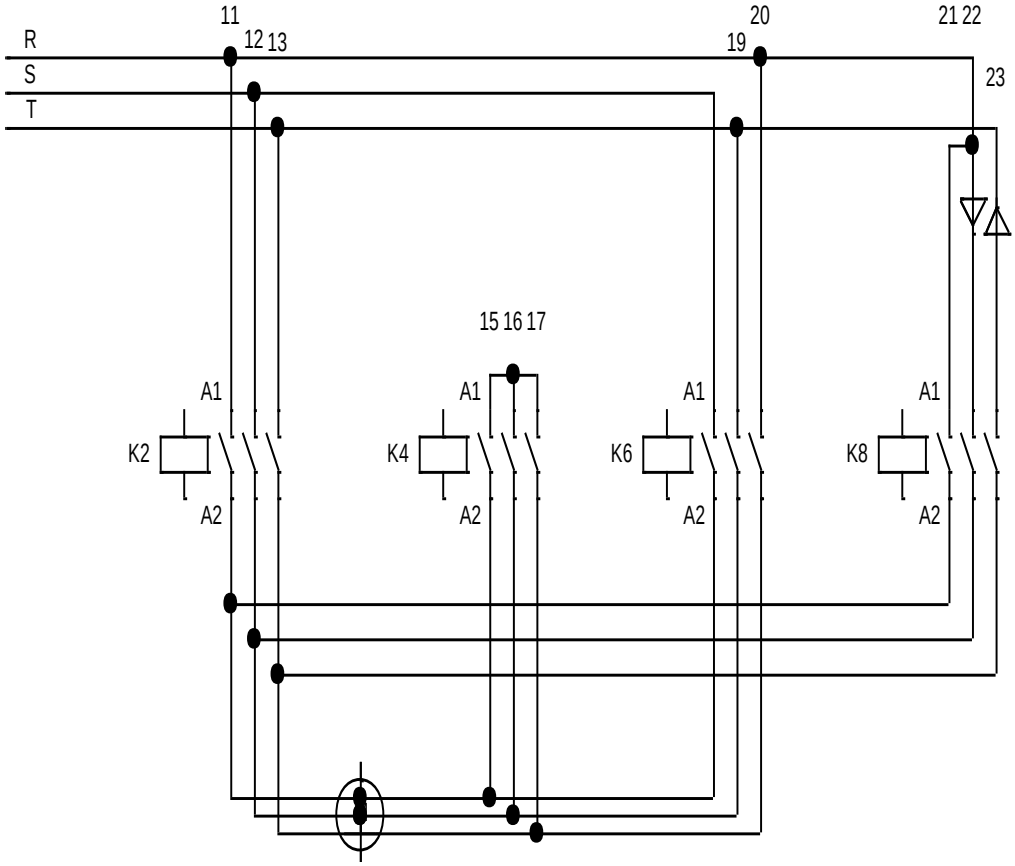

Sequence

- **Contactor 2 and 4 = star circuit**
- **Contactor 2 and 6 = delta circuit**
- **Contactor 8 = braking system**

4. **Programmable Logic Control**
   - **Plant : Temperature – Level - Pressure**

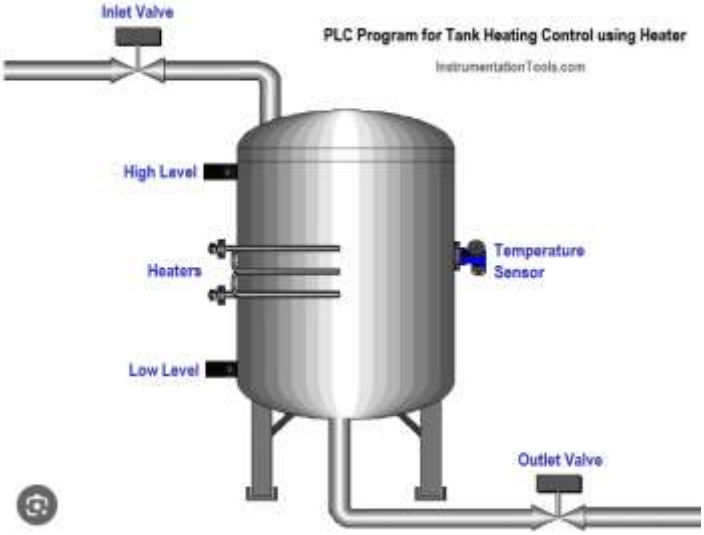

This is an automatic distillation system. Where this machine can simulate the distillation process by using level sensors, temperature sensors, and pressure sensors. The distillation process is the process of making oil by using essential plants which are given water vapor, which will automatically separate the water and oil. Each sensor used has its own actuator. Level sensor, the sensor functions to detect the water level, if the level is less then the pump will turn on, and vice versa when the water is sufficient then the pump will stop. Temperature sensor, this sensor functions to measure the temperature of the tank. If water is available and the room temperature is cold, the heater will turn on, and vice versa, when the temperature is too hot, the heater will turn off. The last one is the pressure sensor, this sensor functions to detect the tank pressure, if it feels that the tank pressure is sufficient, it will open a valve which will later carry steam to the essential plants so that the pressure received by the plants is ideal and able to produce better quality oil. When the pressure drops, the valve will be closed to produce the desired pressure.

   - **Flowchart**

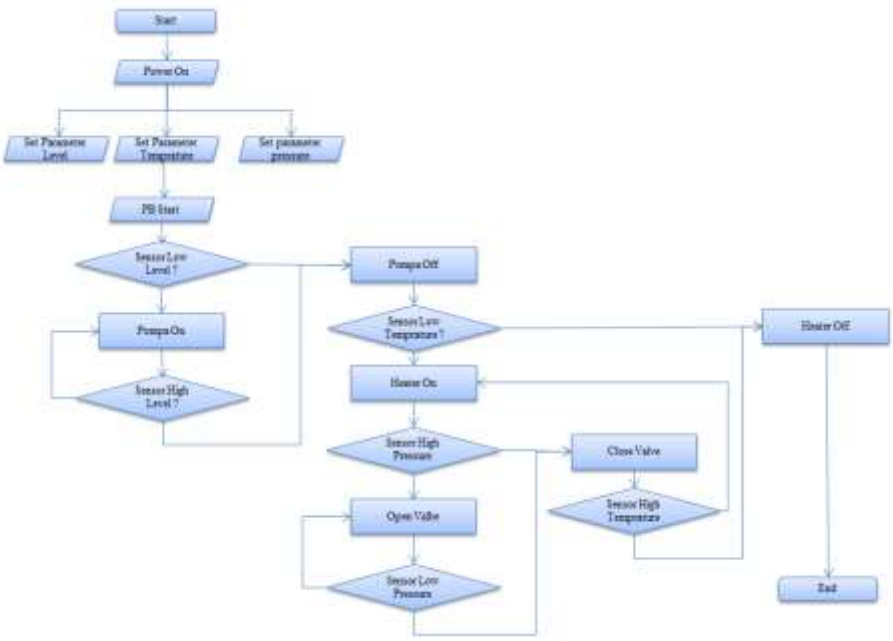

- **Sequence Diagram**

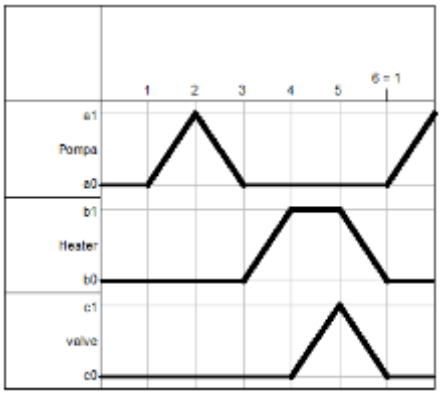

Set Parameter = low level, high level, low temprature, high temprature, low pressure, high pressure

A+ = Pb.sec1

e2 = a1.sec1

A- = Sec2

B+ = a0.sec2

C+ = b1.Sec2

e3 = c1.sec2

B- = Sec3

C- = Sec3

e1 =bo.co.Sec3

- **Wiring Digaram – PLC CP1H type CPU XA**

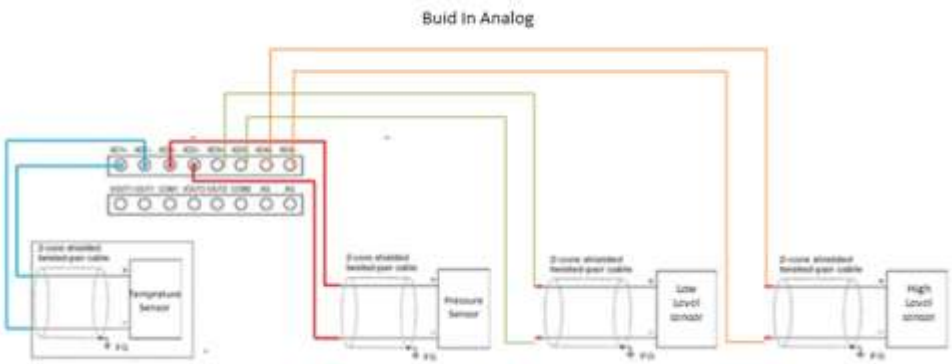

-

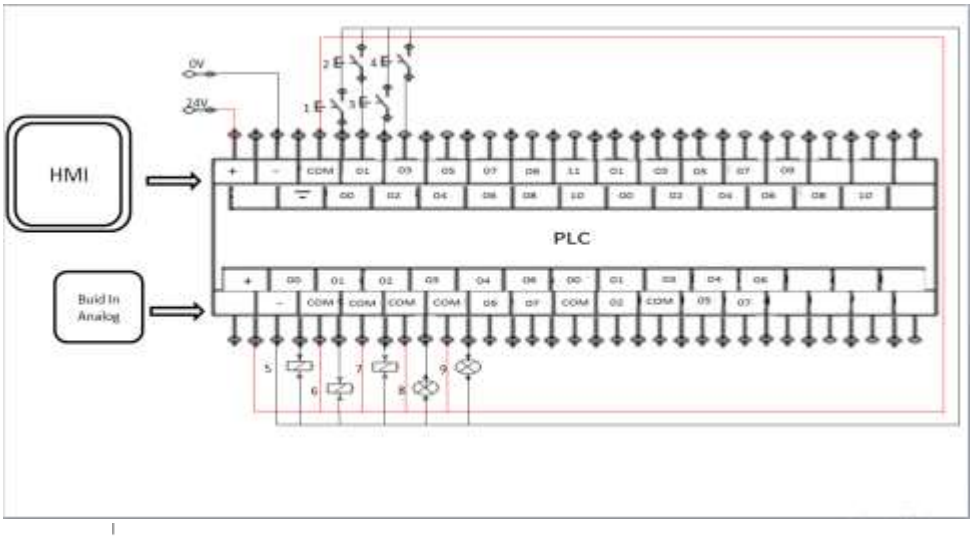

1	PB On	5	Pompa
2	PB Start	6	Heater
3	PB Emergency	7	Valve
4	PB Reset	8	Indicator High Level
		9	Indcator Low Level

HMI Designed

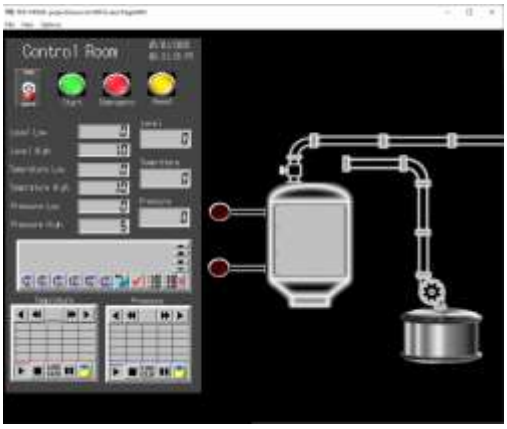

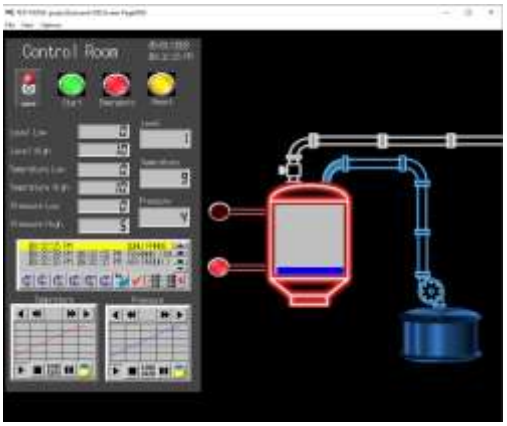

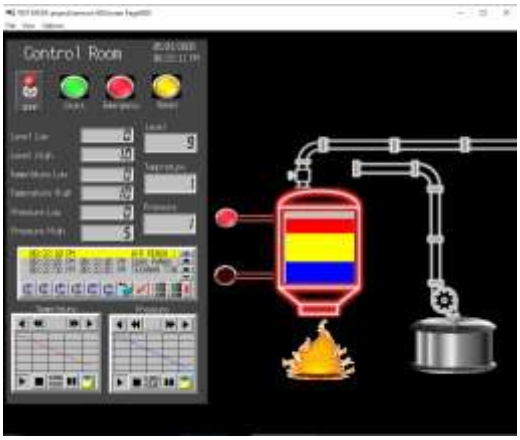

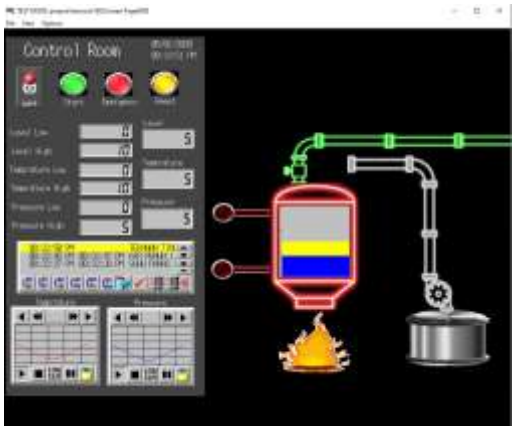

5. **Data Communication**

Make project to monitor Henhouse : Temperature and Ultrasonic (with Android Application). The ultrasonic sensor is used to detect distance the food. If the distance too far, it means that the food is empty and indicator LED will turn on. The temperature sensor is used to detect the temperature and humidity, if the temperature or humidity isn't normal it will turn on LED as an indicator.

Wiring Diagram

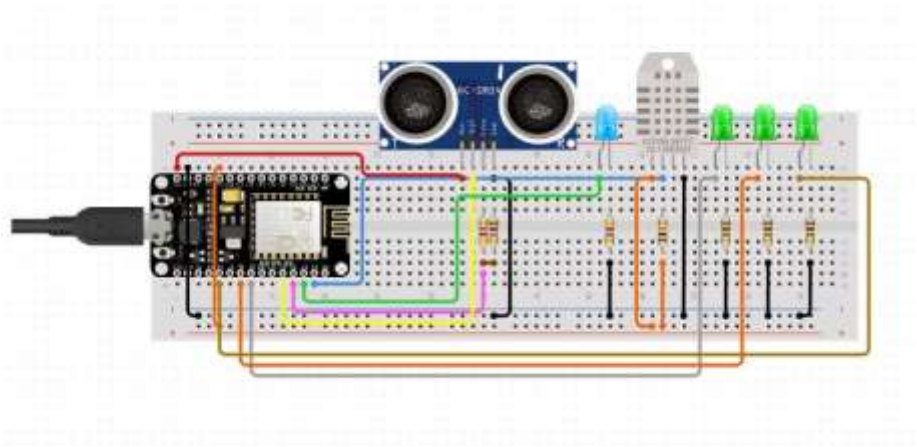

Stucture Database with Firebase

Result

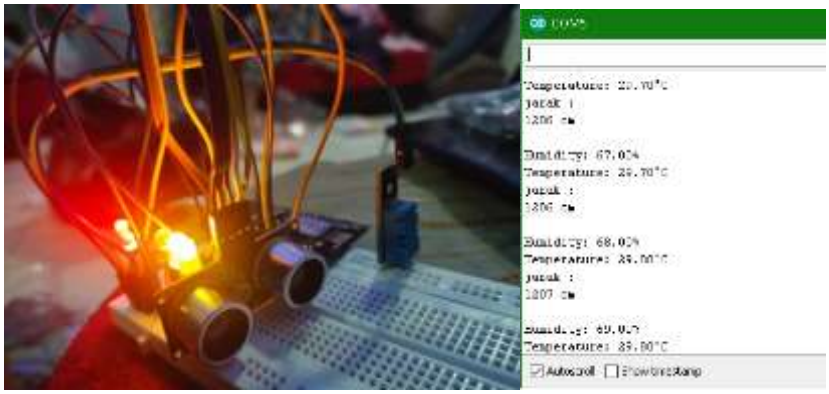
COM5
Temperature: 29.70°C
jarak :
1206 cm
Humidity: 67.00%
Temperature: 29.70°C
jarak :
1206 cm
Humidity: 68.00%
jarak :
1207 cm
Temperature: 29.80°C
Autoscroll
Show timestamp

MONITORING KANDANG AYAM
START
LAMPU PIJAR (DHT11)
Suhu 29.9 °C
Keadaan Lampu
Sangat_Terang
255
PAKAN AYAM (ULTRASONIK)
Jarak 127 cm
Wadah Pakan
Kosong
TAMPILKAN
HOME
LAMPU PIJAR (DHT11)
Suhu 29.8 °C
Keadaan Lampu
Sangat_Terang
255
PAKAN AYAM (ULTRASONIK)
Jarak 129 cm
Wadah Pakan
Kosong
TAMPILKAN
HOME
Kelembaban 67%
Suhu 29.9°C
Keadaan Lampu :Sangat_Terang
Lampu Pijar :255
Jarak Pakan :137cm
Kondisi Wadah :Kosong
LED1 :0
LED2 :0
LED3 :0

6. Data Acquisition

Make project to control and monitor Henhouse : Temprature, Ultrasonic and water level (with Android Application)

Description :

This project is called IOT-based Chicken Coop Management. In this project we can control and monitor the chicken coop from feeding, drinking, and adjusting the temperature. The control and monitoring system will be accessible via an Android Smartphone. This project uses 3 sensors and 3 actuators, where each sensor has access to activate the actuator. The first system is the feeding of chickens, where the container of chicken feed will be detected by the ultrasonic sensor, when the ultrasonic sensor detects an object closely, it means that there is food there. on the other hand, when the ultrasonic sensor detects a distant object, it can mean that there is no food in the container, so the servo motor will move to open the door to remove the chicken feed. The second system is drinking, when the water sensor detects low-level water, the system will send a signal to activate the pump so that the water container will be filled and the pump will stop when the water reaches a certain level. The last system is temperature adjustment use DHT11 sensor, when the sensor detects a low temperature, the system will send a signal to turn on the light very brightly, otherwise when the sensor detects a high temperature, the light will get dimmers and even turn off. All of these signals will be stored in a firebase, and can be accessed directly by the Android system.

Wiring electrical :

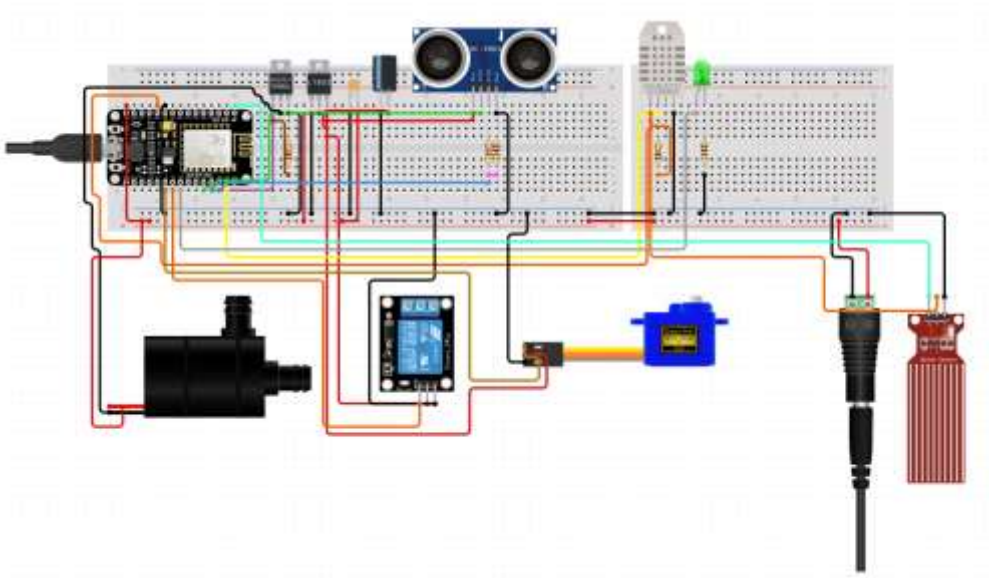

Result

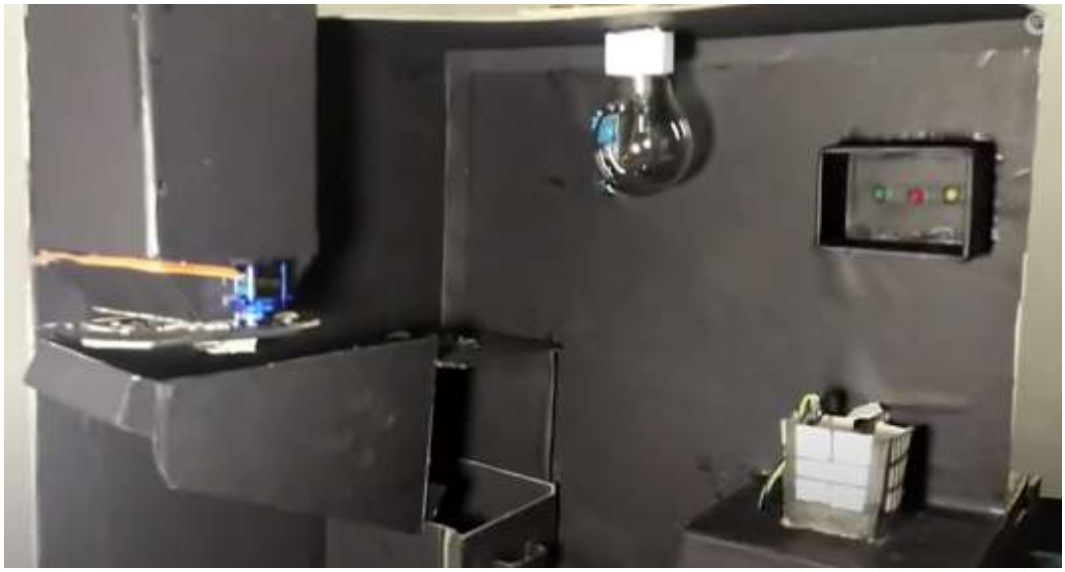

Youtube simulation : https://www.youtube.com/watch?v=CUOgQmq9LQ4

7. Production Planning Control

Product : Teaching Aid Pneumatic

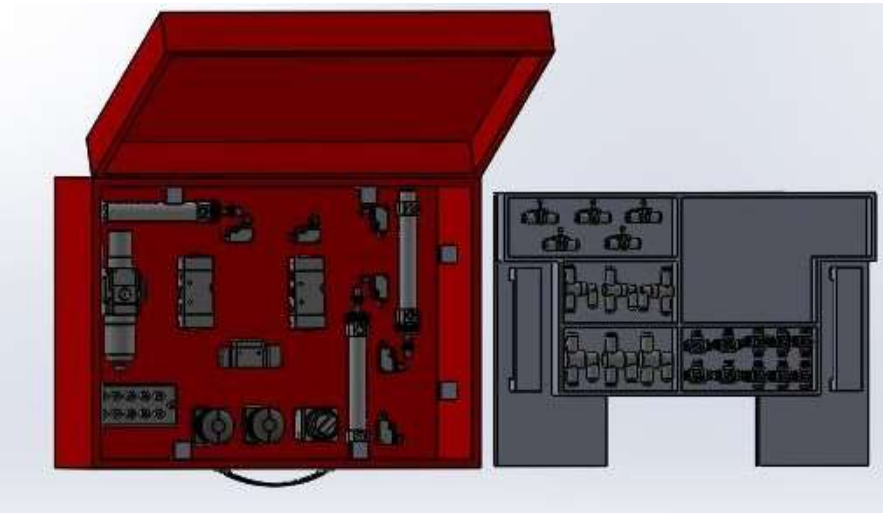

The purpose of this project is how to make teaching aid pneumatic by implementation production planning control from concept until deliver product to costumers. This machine has 17 component of pneumatic and electro pneumatic. There are single cylinder, double cylinder , rectangular connection, 3/2 roller valve, OR fitting, AND fitting, one way valve control, 3/2 push button valve, 3/2 selector valve, 5/2 air operation single valve, 5/2 air operation double valve, air fitting, pneumatic tube adapter, union elbow, polyuthance tube

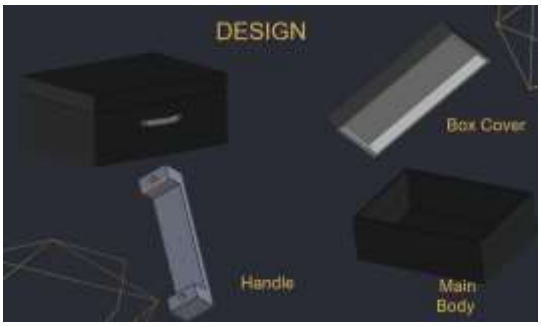

Structure of Product

Standard Operational

1. Use Pneumatic Teaching Aid at room temperature
2. Use Pneumatic Teaching Aid at Normal humidity
3. Open the Pneumatic Teaching Aid Suitcase in a horizontal position
4. Connect the air source to the Pneumatic regulator
5. Avoid sources of air with flammable gas content
6. Make sure the air pressure is not more than 4.5 bar
7. Connect the power source to a 24 VDC
8. Pneumatic Teaching Aid is ready to use
9. After using Pneumatic Teaching Aid, inventory components and ensure that no equipment is lost / damaged. The number of components can be checked by looking at the inventory card
10. Close the suitcase slowly and lock it.
11. Store Pneumatic Teaching Aid properly, not stacked, and not stored at the end of the table to prevent the suitcase from falling

Schedulling and Networking

ID	Task Mode	Task Name	Duration	Start	Finish	Predecessors
1		**Manually Scheduled**	**101 days**	**Mon 04/01/21**	**Mon 24/05/21**	
2		**Initiation**	**12 days**	**Mon 04/01/21**	**Tue 19/01/21**	
3		Concept Product	4 days	Mon 04/01/21	Thu 07/01/21	
4		Measure competitors	3 days	Fri 08/01/21	Tue 12/01/21	3
5		Develop a unique Product	5 days	Wed 13/01/21	Tue 19/01/21	4
6		**General Concept Description**	**2 days**	**Wed 20/01/21**	**Thu 21/01/21**	
7		Project Schedule Planning	2 days	Wed 20/01/21	Thu 21/01/21	5
8		Drafting	1 day	Wed 20/01/21	Wed 20/01/21	5
9		**General Design Descriptions**	**9 days**	**Fri 22/01/21**	**Wed 03/02/21**	
10		Designing mechanical components	4 days	Fri 22/01/21	Wed 27/01/21	7,8
11		Designing Pneumatic components	2 days	Thu 28/01/21	Fri 29/01/21	10
12		Designing Electrical components	1 day	Mon 01/02/21	Mon 01/02/21	11
13		Product design verification	2 days	Tue 02/02/21	Wed 03/02/21	12
14		**General Material Component Descriptions**	**4 days**	**Thu 04/02/21**	**Tue 09/02/21**	
15		List of components and sorting of materials available	2 days	Thu 04/02/21	Fri 05/02/21	13
16		Price list of survey materials	3 days	Thu 04/02/21	Mon 08/02/21	13
17		Bill of material	1 day	Tue 09/02/21	Tue 09/02/21	15;16
18		**Ordering Materials**	**42 days**	**Wed 10/02/21**	**Thu 08/04/21**	
19		Verify material list	1 day	Wed 10/02/21	Wed 10/02/21	17
20		Order	40 days	Thu 11/02/21	Wed 07/04/21	19
21		Check the order material	1 day	Thu 08/04/21	Thu 08/04/21	20
22		**Preparation**	**44 days**	**Wed 10/02/21**	**Mon 12/04/21**	

Project: TeachingAidPneumatic
Date: Sat 19/12/20

Task		Inactive Summary		External Tasks	
Split		Manual Task		External Milestone	
Milestone		Duration-only		Deadline	
Summary		Manual Summary Rollup		Critical	
Project Summary		Manual Summary		Critical Split	
Inactive Task		Start-only		Progress	
Inactive Milestone		Finish-only		Manual Progress	

Page 1

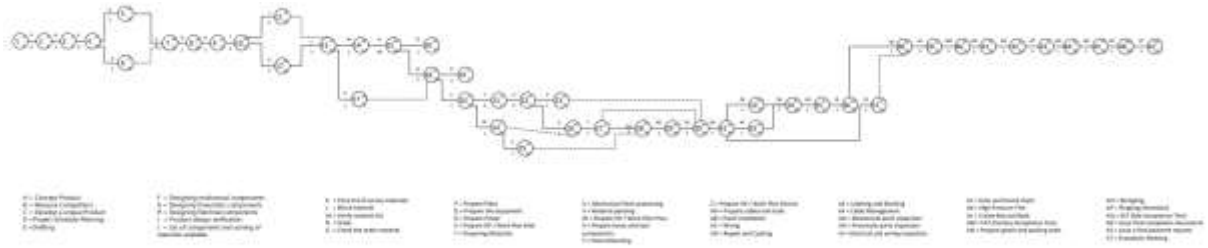

Man Power

No	Design	Object	Activity	Time	Labor Rates	NoP	Amount	Information
1	Design	Initiation	Concept Product	2 days	Rp3.713.696	1	Rp3.713.696	Project Manager;Finance & Bussiness Management
2			Measure Competitors	2 days	Rp3.448.432	1	Rp3.448.432	Secretary production
3			Develop a unique Product	1 day	Rp5.950.860	1	Rp5.950.860	Project Manager;Sales Marketing 1
4		General Concept Description	Project Schedule Planning	2 days	Rp3.183.168	1	Rp3.183.168	Finance & Bussiness Management;Project Manager
5			Drafting	1 day	Rp2.917.904	1	Rp2.917.904	Finance & Bussiness Management;Project Manager
6		General Design Descriptions	Designing mechanical components	4 days	Rp4.314.176	1	Rp4.314.176	Designer Engineer;Drafter
7			Designing Pneumatic components	2 days	Rp3.755.008	1	Rp3.755.008	Designer Engineer;Drafter
8			Designing Electrical components	1 day	Rp3.475.424	1	Rp3.475.424	Designer Engineer;Drafter
9			Product design verification	2 days	Rp3.211.296	1	Rp3.211.296	Project Manager
10		General Material Component Descriptions	List of components and sorting of materials available	2 days	Rp743.744	1	Rp743.744	General Service;IT Staff 1
11			Price list of survey materials	3 days	Rp3.744.520	1	Rp3.744.520	Consultant Material
12			Bill of material	1 day	Rp2.958.296	1	Rp2.958.296	Consultant Material;Secretary production
13		Ordering Materials	Verify material list	1 day	Rp2.943.688	1	Rp2.943.688	Project Manager
14			Order	40 days	Rp0	1	Rp0	
15			Check the order material	1 day	Rp3.168.440	1	Rp3.168.440	Consultant Material

Bill Of Material

BILL OF MATERIAL PNEUMATIC TEACHING AID

1	[illegible]	[illegible]	1	pcs	Rp [illegible]	Rp [illegible]	[illegible]	
2	[illegible]	[illegible]	1	pcs	Rp [illegible]	Rp [illegible]	[illegible]	
3	[illegible]	[illegible]	2	pcs	Rp [illegible]	Rp [illegible]	[illegible]	
4	[illegible]	[illegible]	1	pcs	Rp [illegible]	Rp [illegible]	[illegible]	
5	[illegible]	[illegible]	4	set	Rp [illegible]	Rp [illegible]	[illegible]	
6	[illegible]	[illegible]	1	pcs	Rp [illegible]	Rp [illegible]	[illegible]	
7	[illegible]	[illegible]	1	pcs	Rp [illegible]	Rp [illegible]	[illegible]	

8. Distributed Control System

Description

Monitor Testing Station using Wonderware Intouch as human Machine Interface; PLC Omron and Siemens as a control station, and KepServerEX6 as a protocol communication.

Communication Wiring

Connect PLC and PC with Switch HUB

Network ID

IP PLC OMRON : 192.168.10.16

IP PLC Siemens : 192.168.10.6

Design KepServerEX6 and Wonderware Intouch

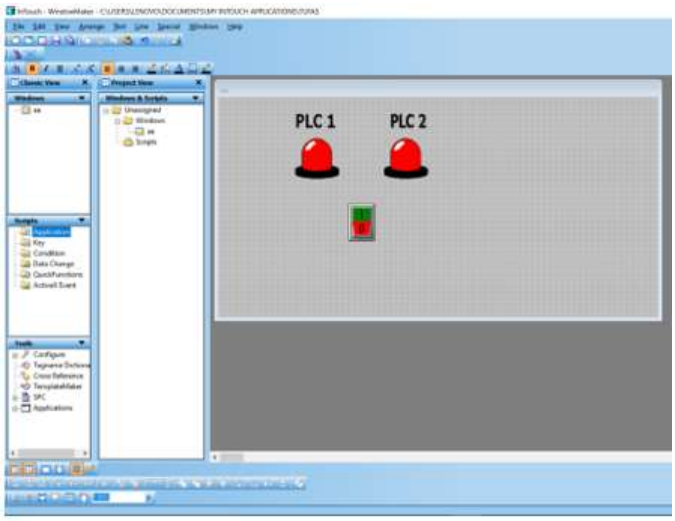

Result

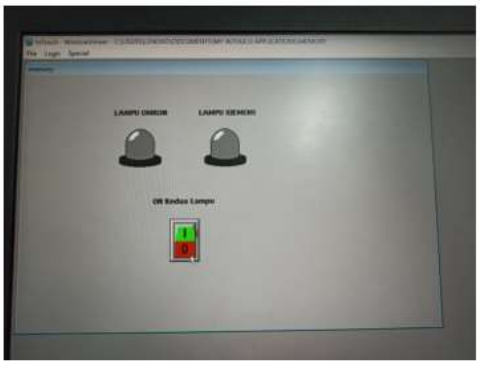
LAMPU OMRON
LAMPU SIEMENS
OR Redus Lampu
1
0

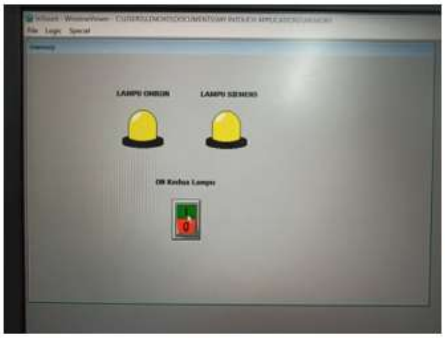
LAMPU OMRON
LAMPU SIEMENS
OR Redus Lampu
1
0

9. SCADA and DCS Study Casus

- **Decription**

  A supervisor can still monitor production activities without having to be in an operating plant, checking production history and so on. The production process which consists of several plants can be controlled through a single computer connected to the network. To monitor a process control, it is necessary to control a system with simulations that can show conditions in real time and controls that can send data to the plant even remotely. There is software that provides these features, such as for example Wonderware to help monitor the control of the process. This project is used to create a Distributed Control System that can monitor a plan handling station using Wonderware Intouch and make data acquisition by saving data to a SQL server and excel.

- **Design**

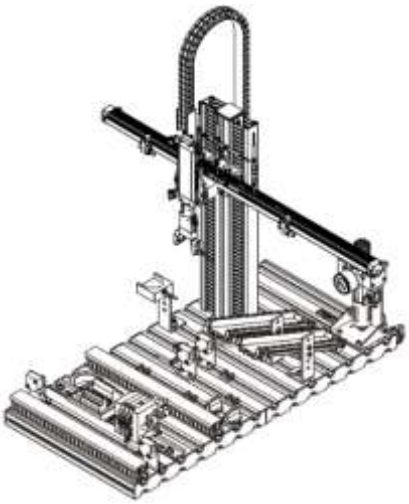

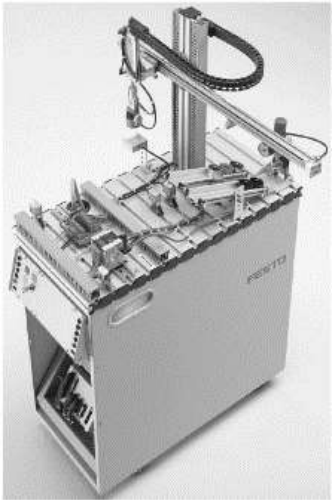

- **Wiring**

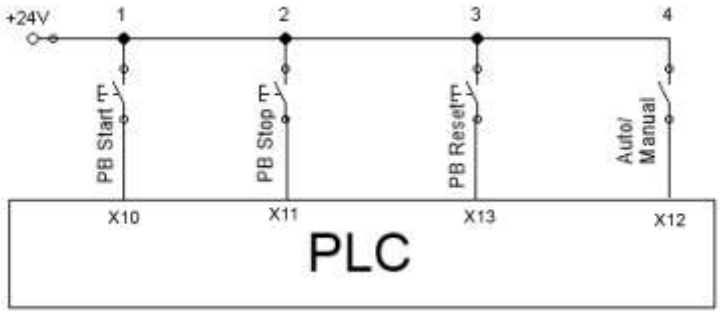

Input

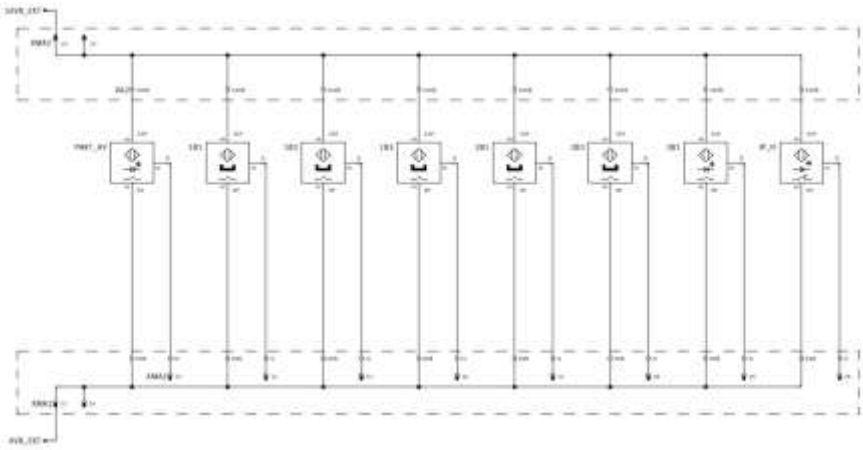

Sensor

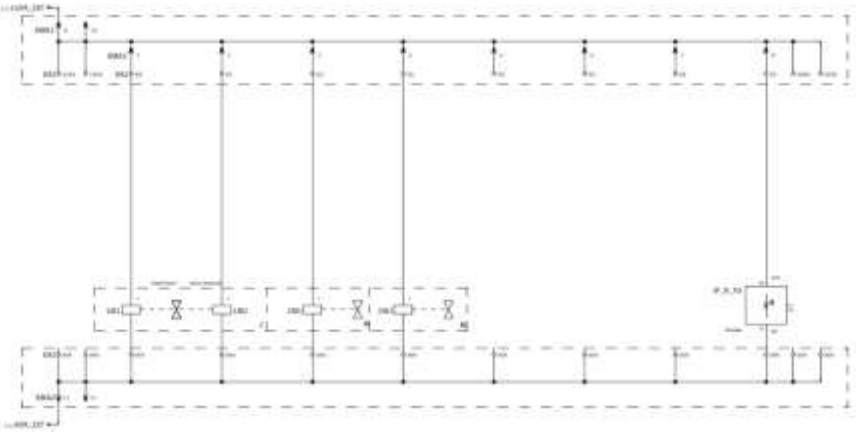

Output

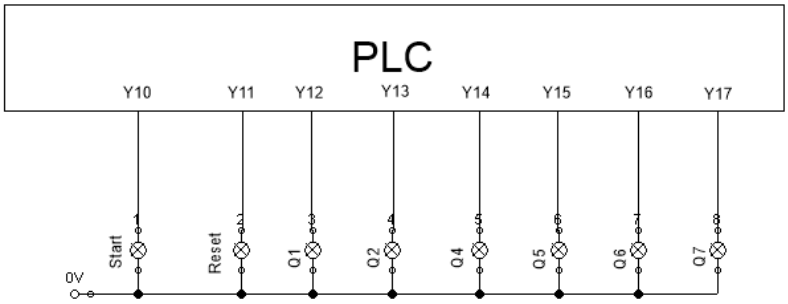

Indicator

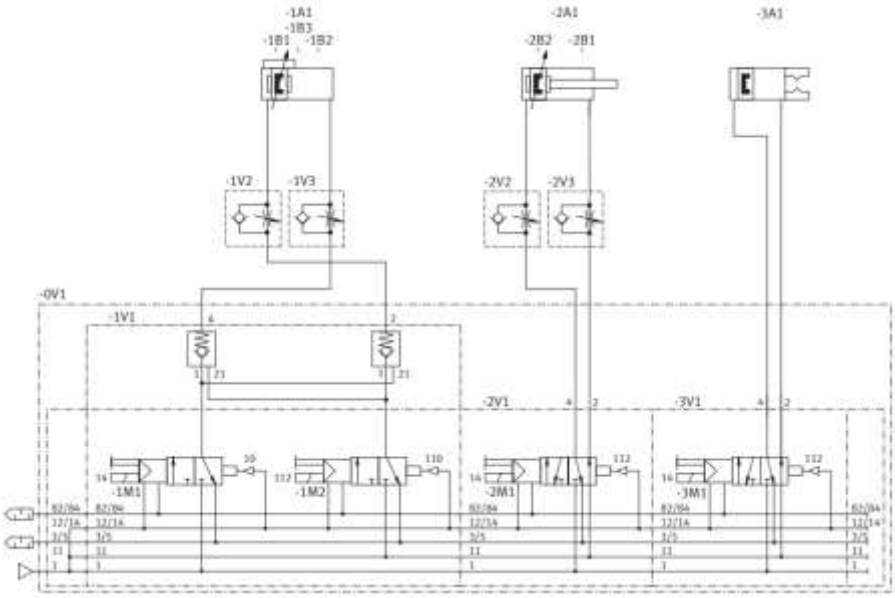

Pneumatic

Design HMI

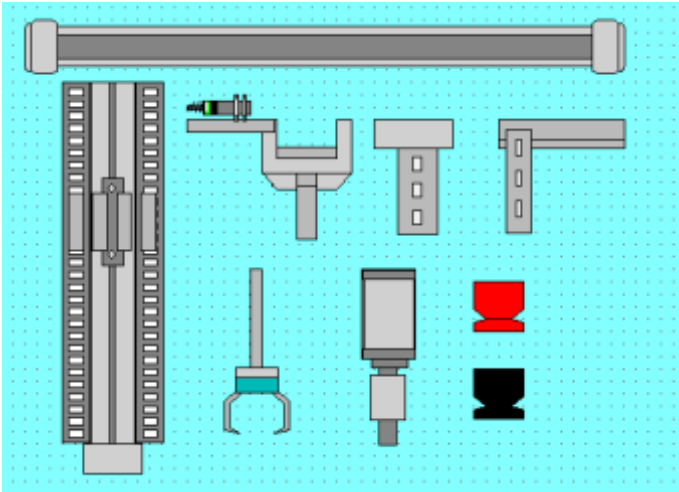

Result

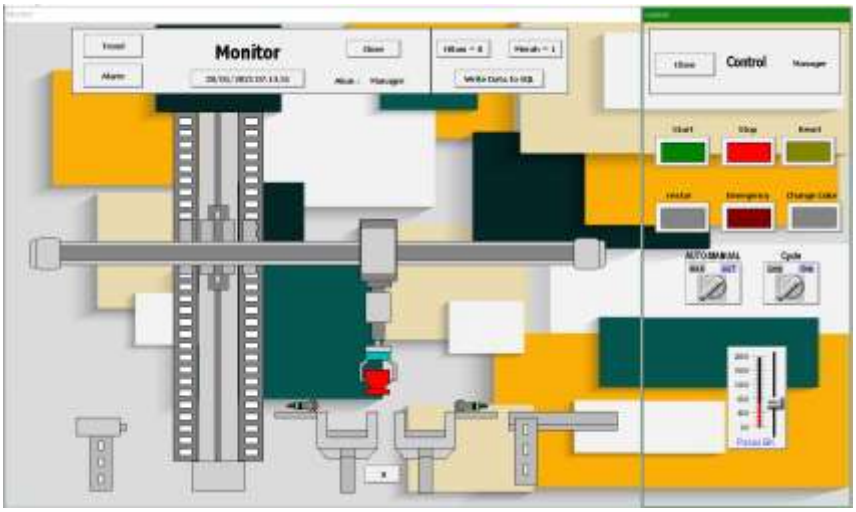

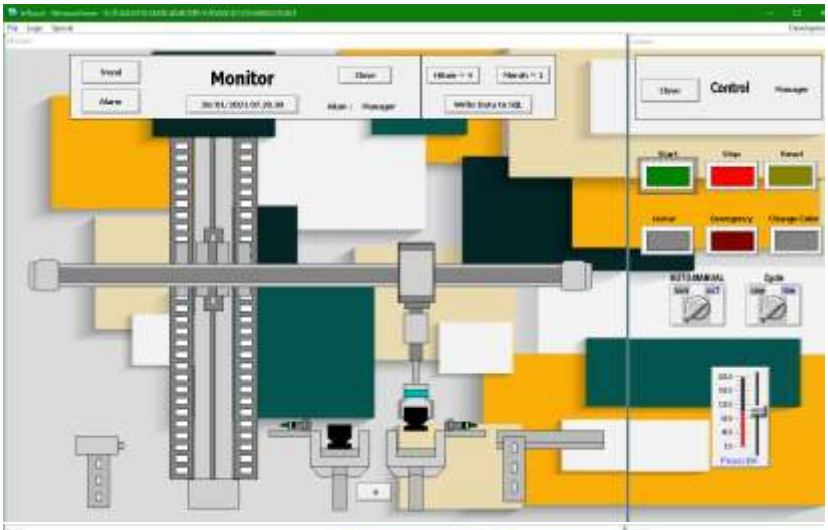
Trend
Alarm
Monitor
Close
Control
Manager
Start
Stop
Reset
Cycle

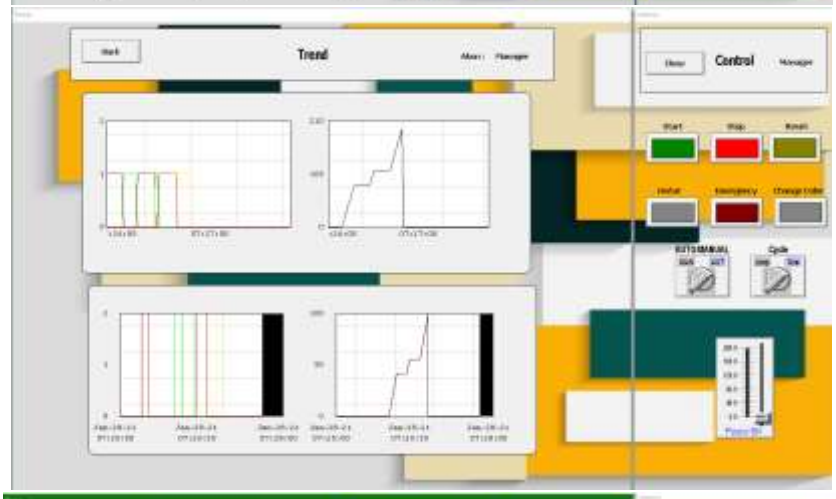
Back
Trend
Close
Control
Manager
Start
Stop
Reset
Cycle

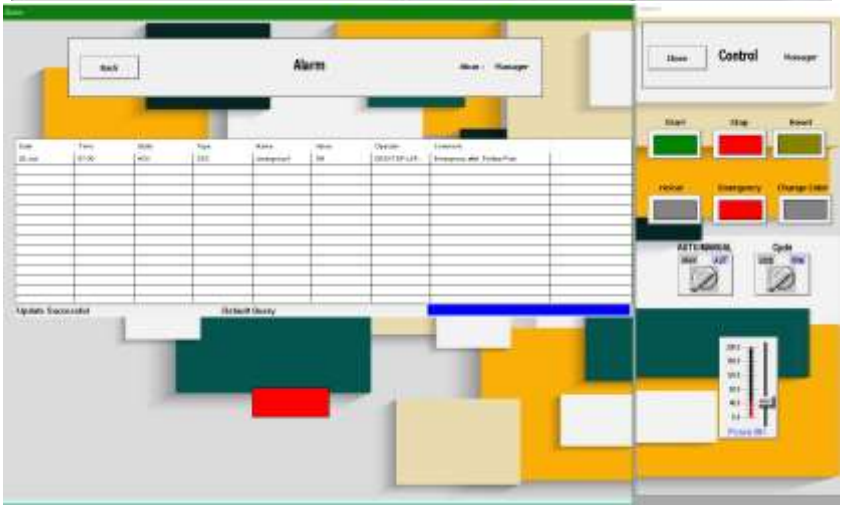
Back
Alarm
Close
Control
Manager
Start
Stop
Reset
Cycle

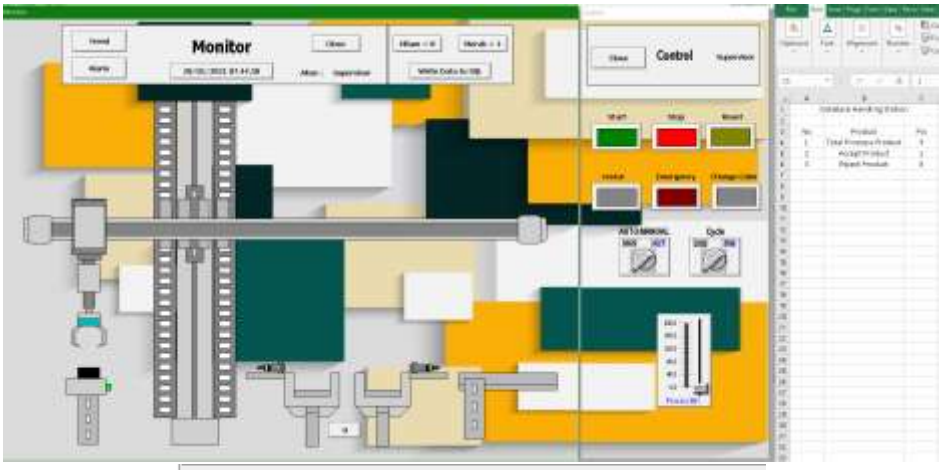

Results | Messages

	DateTime	BendaH1	BendaM1	TotalProduct1
1	14/01/2021 22.28.04	4	3	NULL
2	14/01/2021 22.28.09	4	3	NULL
3	14/01/2021 22.29.42	5	3	NULL
4	14/01/2021 22.47.25	1	0	NULL
5	14/01/2021 22.51.39	1	1	2
6	16/01/2021 10.30.55	1	1	2
7	18/01/2021 19.23.48	0	0	0
8	18/01/2021 19.24.51	1	0	1
9	28/01/2021 07.43.56	8	1	9

10. Internship Project : Control and Monitor Air Conditioner Server room Polman Bandung

Description :

This Project is control 3 air conditioner server room Polman Bandung. Each air conditioner will on for 2 days alternately. The system will record temperature and save to database used MySQL and ANTARES. Beside that the system will send notification to the operator if the air conditioner's temperature isn't normal. To save the energy the system used ultrasonic sensor to turn on the lamp when there is a person in the server room.

Design system

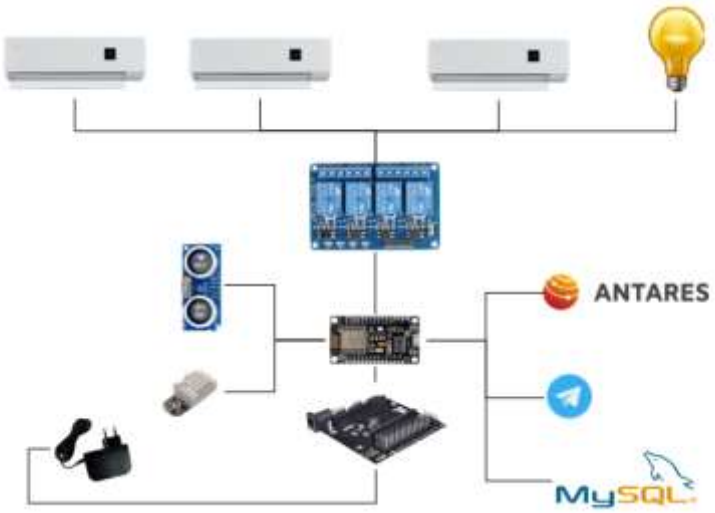

Wiring

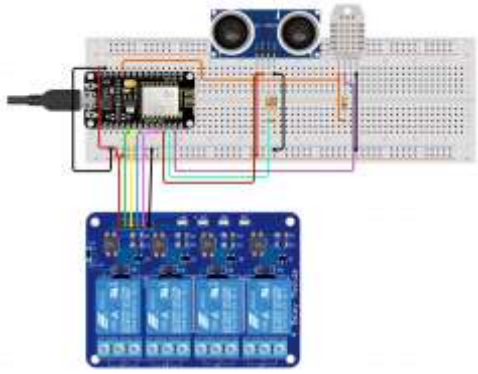

Bill of Material

Implementation

Notification to Operator Telegram

Monitoring in operator PC

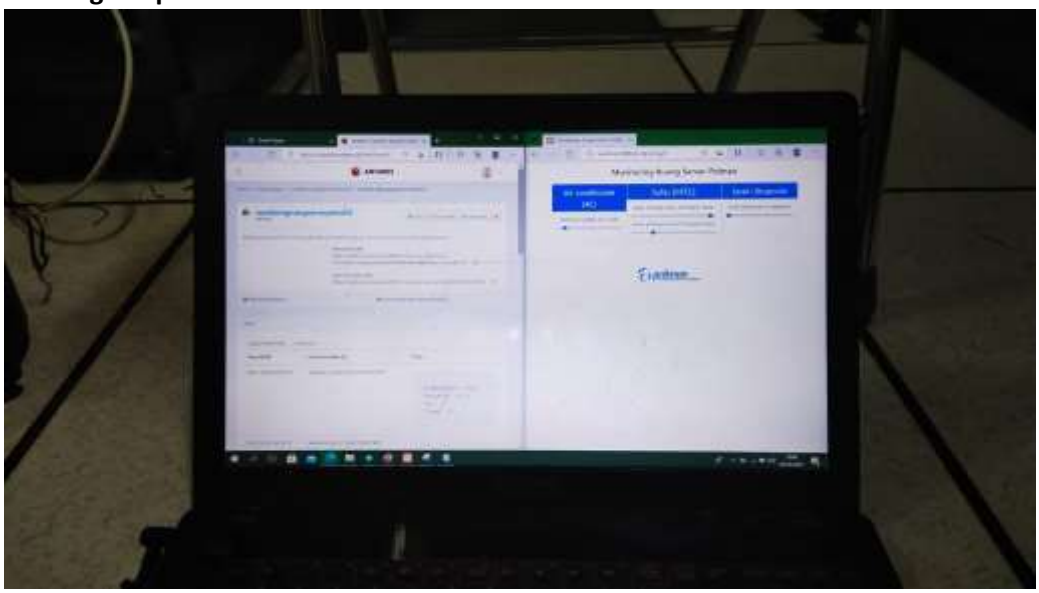

11. Internship Project : Control Ventilator Indonesia

Description :

This project is used for Covid 19 patients with respiratory failure. There are 2 mode that control with this machine, there are volume control and pressure control. This machine use pressure sensor, oxygen sensor, and flow sensor to get any parameter then calculate to control servo motor. There are some alarm than can show in HMI and buzzer. This machine can control and monitor with nodered application server.

Design

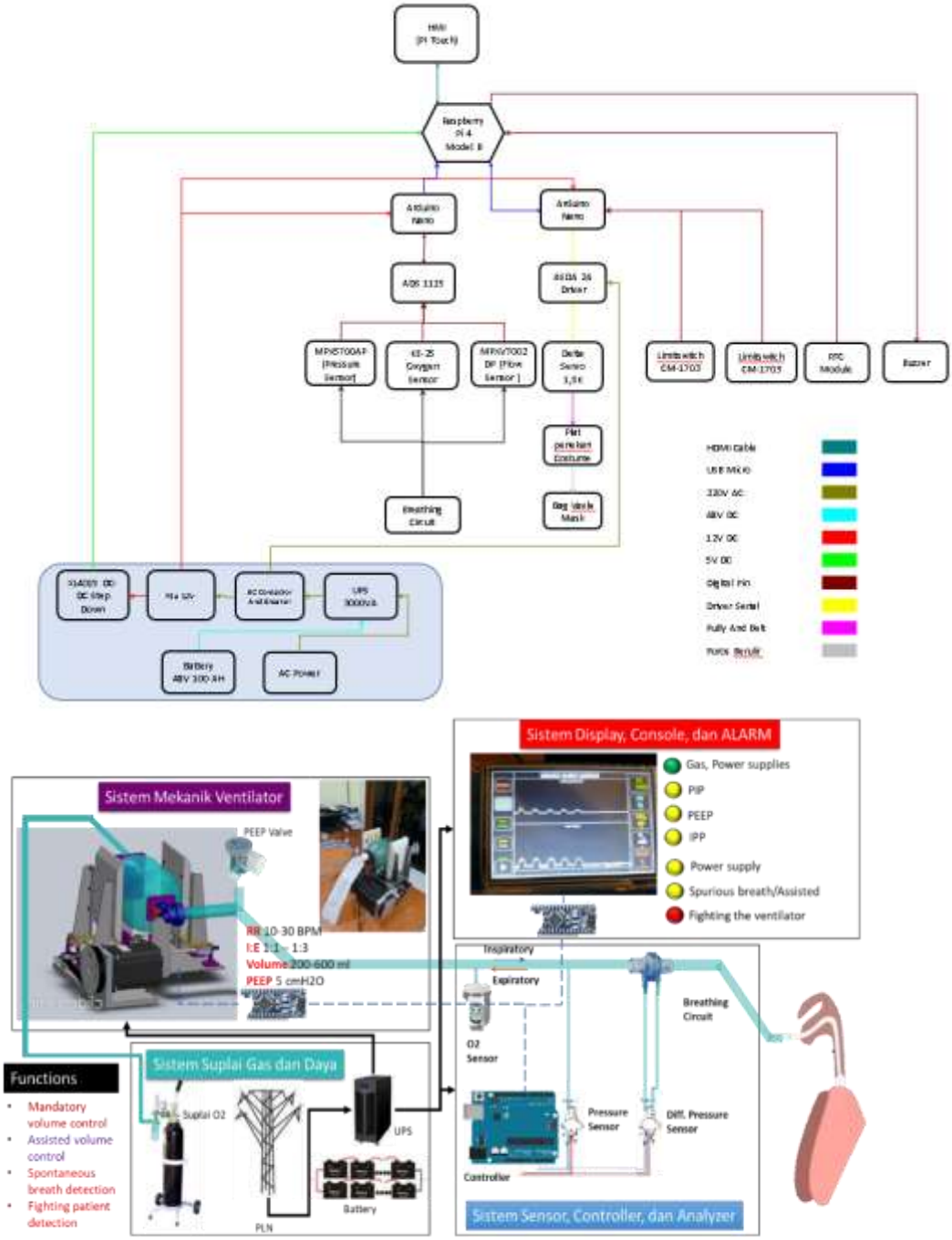

Interface HMI

Implementation
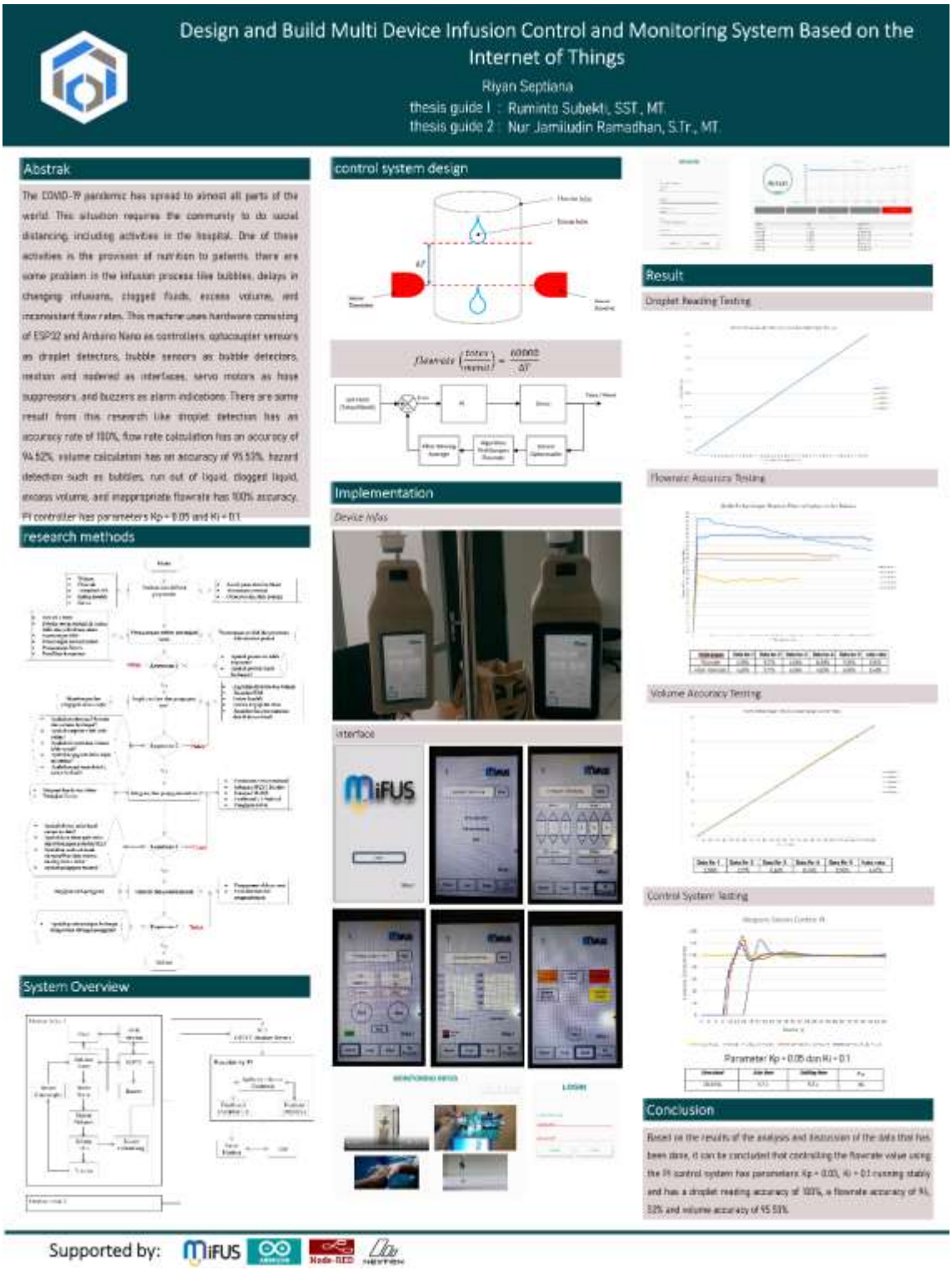
12. **Final Project : Design and Build Multi Device Infusion Control and Monitoring System Based on the Internet of Things**